Cell Theory tells us that all living things are made of one or more cells. What other characteristics are shared by all living things? Use these photos to help you get some ideas.

Characteristics of Life

Characteristics of Life

Order

Grow and develop

Reproduce

Respond to the environment

Exchange energy and materials with the environment

Maintain homeostasis

Evolve

Characteristics of life

Cells are classifiedbefore within two broad categories:

Prokaryotes nucleus (bacteria)
- Considered to be more primitive; they are very simple and small
- Lack a nucleus
- Able to grow and divide rapidly because of their small size
- Are divided into true
  - **eubacteria** - found almost anywhere
  - **archaebacteria** - live in extremely harsh environments (hot, salty or acidic)

old

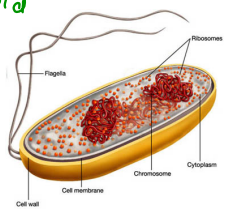

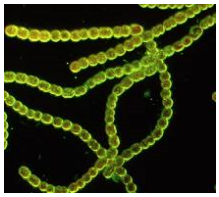

true

Eukaryotes
- More advanced and larger; all species, other than bacteria, are eukaryotes.
- Have a nucleus.
- Organelles allow many activities to take place in the cell at once.

Prokaryotes and Eukaryotes

Endosymbiont Theory

in together living

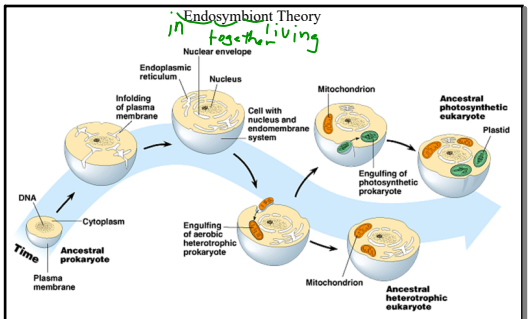

It is believed that eukaryotic cells arose from groups of prokaryotic cells living together - smaller ones inside larger ones.

Do we actually have evidence for this?

- Mitochondria, chloroplasts, and bacteria all have a similar size and shape.
- Mitochondria and chloroplasts are surrounded by a double membrane
- Mitochondria and chloroplasts have their own DNA and it is circular like bacterial DNA.
- Ribosomes found in mitochondria and chloroplasts resemble the ribosomes within bacteria.
- Mitochondria and chloroplasts divide as bacteria do, and do so independently of the cell.

Endosymbiont model

1. What evidence suggests that eukaryotic cells are more recent than prokaryotic cells?

2. How does the endosymbiont theory explain the progression from prokaryotic to eukaryotic cells?

CQ

What are we trying to achieve?
- a small volume and a large surface area

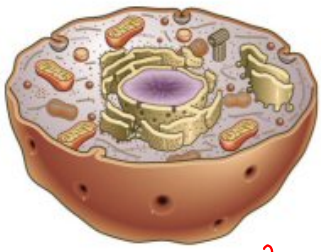

For a sphere,

$$V = \frac{4}{3}\pi r^3$$

$$A = 4\pi r^2$$

1 → 2

What happens if we double the radius?
- the volume increases by 8x
- the surface area increases by 4x

SA:V

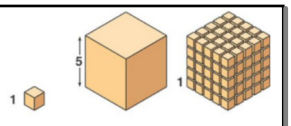

Surface Area to Volume Ratio

1. Copy and complete the table on your own paper by calculating the surface area, volume, and surface area to volume ratio for each cube. *Be sure to include the proper units.*

	Cube	Surface Area	Volume	Surface Area to Volume Ratio
a)	micro (1 cm x 1 cm x 1 cm)	6	1	6:1
b)	macro (5 cm x 5 cm x 5 cm)	150	125	1.2:1
c)	multimicro (each side made of 5 micro cubes)	750	125	6:1

2. When the cube dimensions increase by a factor of 5 (from 1 cm to 5 cm)
a) What is the factor of increase for the surface area?
b) What is the factor of increase for the volume?
3. Cubes (b) and (c) are each 5 cm x 5 cm x 5 cm, and have equal volumes. In other words, they have a 1:1 ratio. Calculate the ratio of surface area for these two cubes.
4. For which two cubes does the ratio between surface area and volume stay the same when the size increases?
5. Why are cells so small? If you're stuck, think about the questions you just answered.
6. Imagine three cells with the dimensions given.

Cell	Length (cm)	Width (cm)	Height (cm)
A	1	1	1
B	2	0.5	1
C	10	0.1	1

	Area	Vol	Ratio
A	6	1	6:1
B	7	1	7:1
C	22.2	1	22.2:1

a) Using a table like the one in Q.1, calculate the surface area to volume ratio for each
b) What do you notice happening as the cells elongate?
c) Why do you think we learned about the concept of surface area and volume?

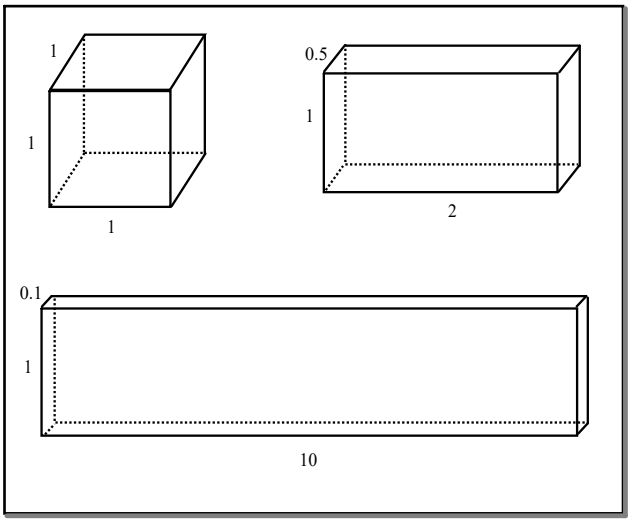

Cell shape

3. As a cell gets larger, volume increases faster than surface area. Why is this a problem?

CQ